BEHA

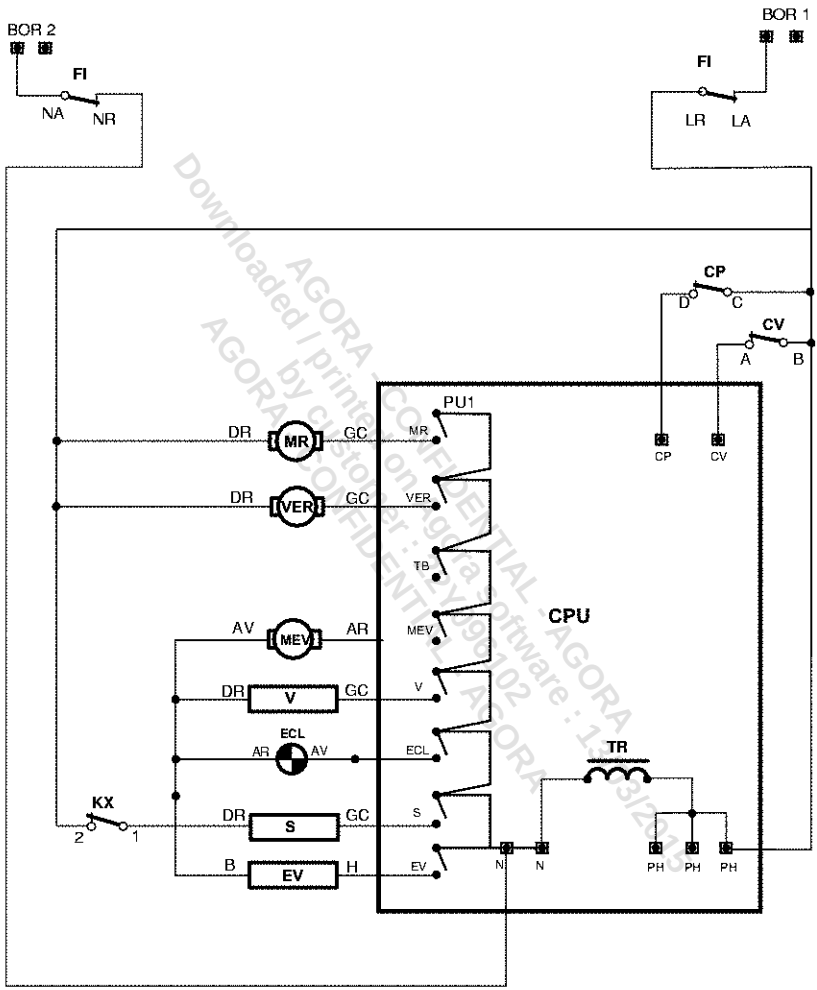

FO 00704165 P

AGORA - CONFIDENTIAL - AGORA
Downloaded / printed on Agora Software : 13/03/2015
by customer : ELY096102
AGORA - CONFIDENTIAL - AGORA